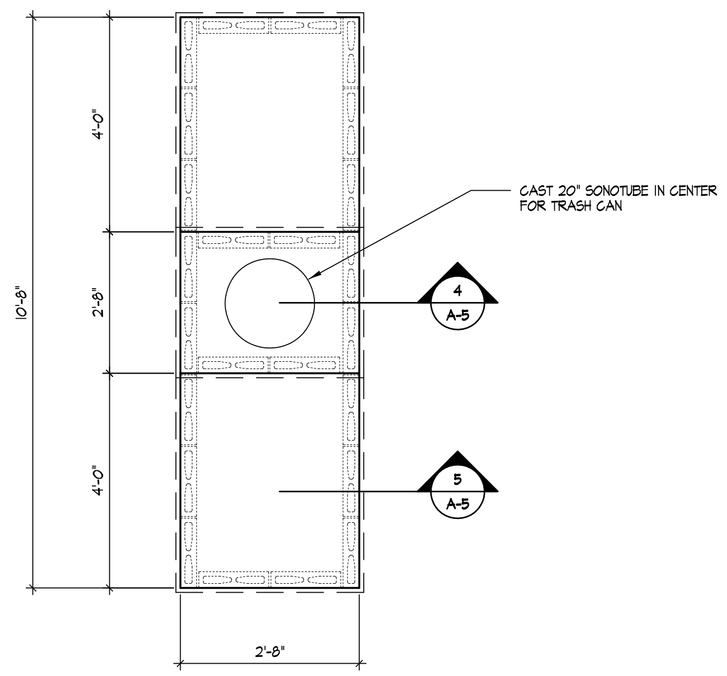

1 / A-5 VACUUM ISLAND PLAN

SCALE: 1/2" = 1'-0"

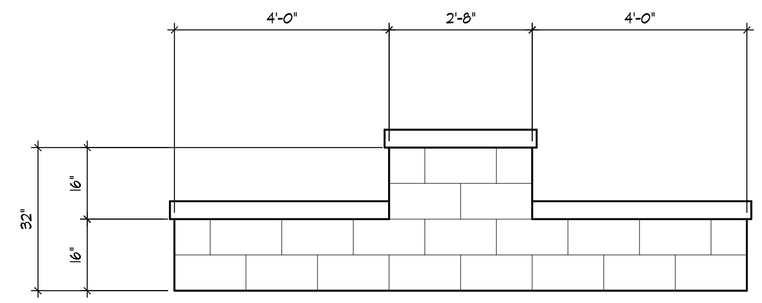

2 / A-5 SIDE VIEW

SCALE: 1/2" = 1'-0"

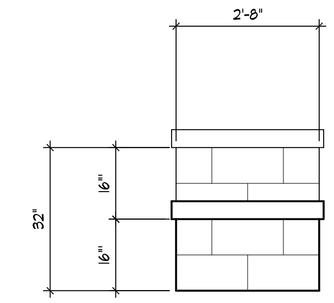

3 / A-5 END VIEW

SCALE: 1/2" = 1'-0"

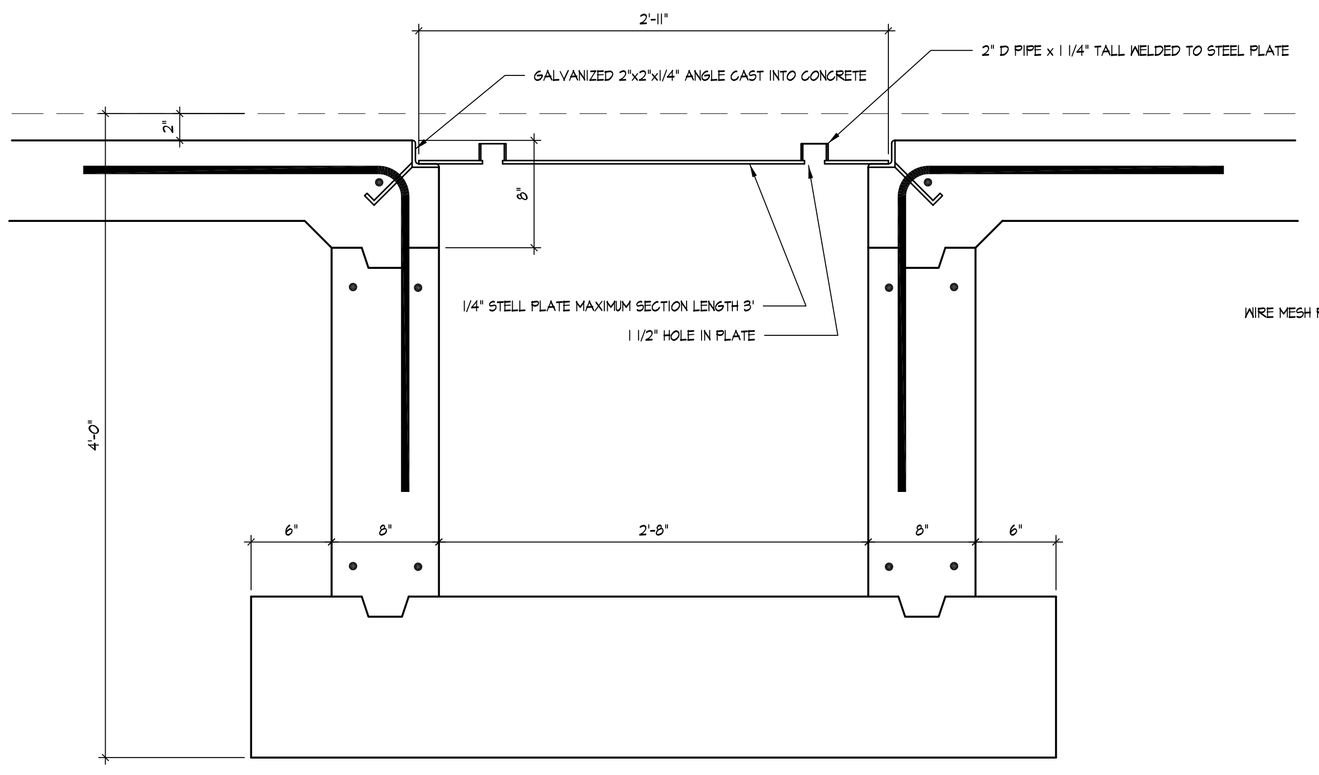

6 / A-3 TYPICAL SUMP SECTION

SCALE: 1 1/2" = 1'-0"

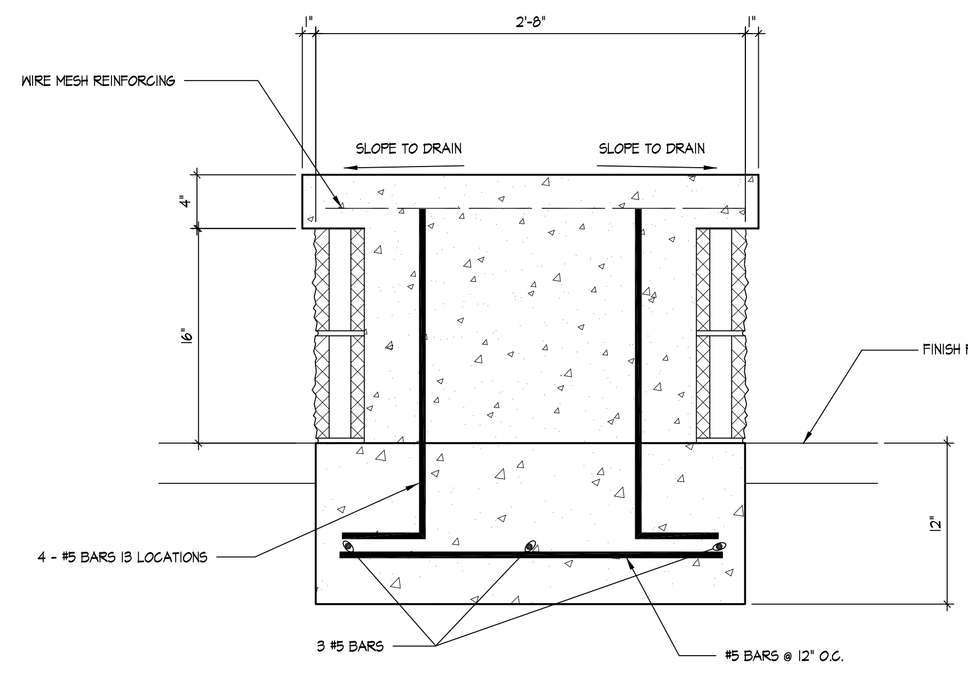

5 / A-5 SECTION

SCALE: 3/4" = 1'-0"

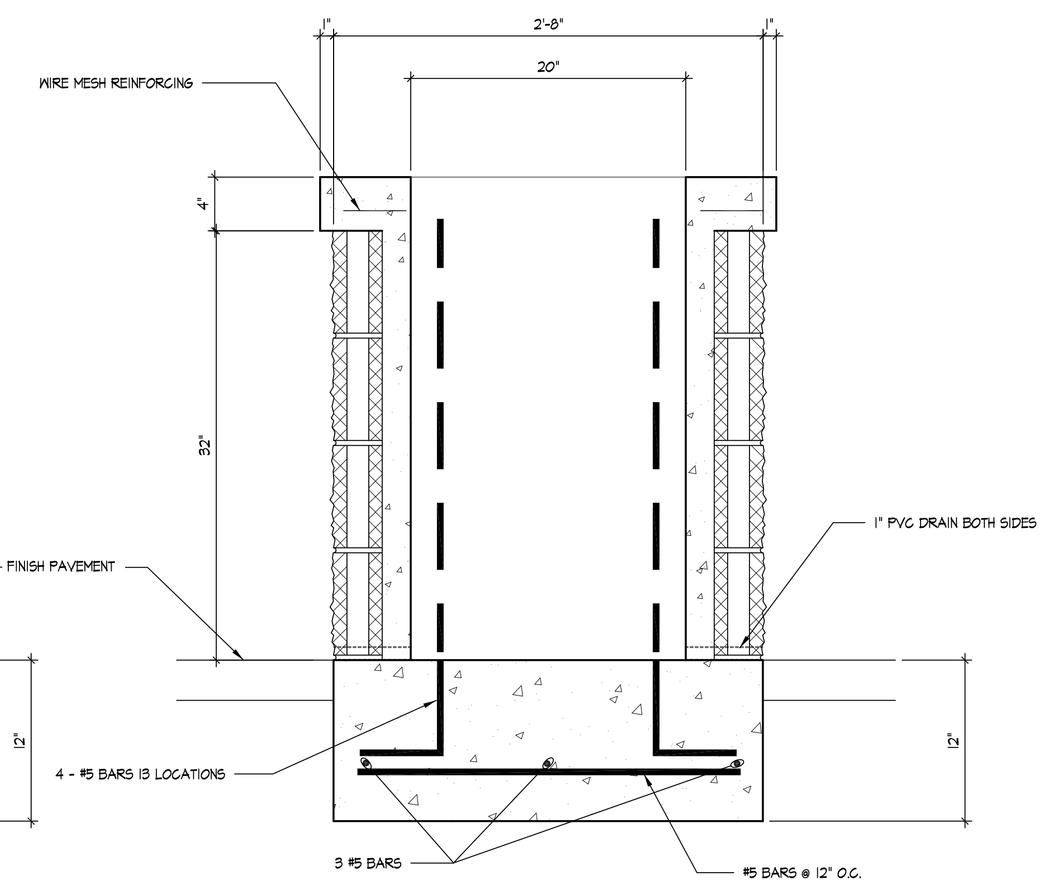

4 / A-5 SECTION

SCALE: 3/4" = 1'-0"

KILLINGLY CAR WASH
1085 NORTH MAIN STREET
KILLINGLY, CT

ALLIEDCONSTRUCTION,INC.
GENERAL CONTRACTORS
PO BOX 973
MANCHESTER, CT 06040
TELEPHONE (860) 645-5888
FACSIMILE (860) 645-0897

DATE:	SCALE:
	AS NOTED

REVISIONS:

11/3/2011 PERMIT
11/11/2011 BO COMMENTS

VACUUM ISLANDS & PIT DETAILS

A-5